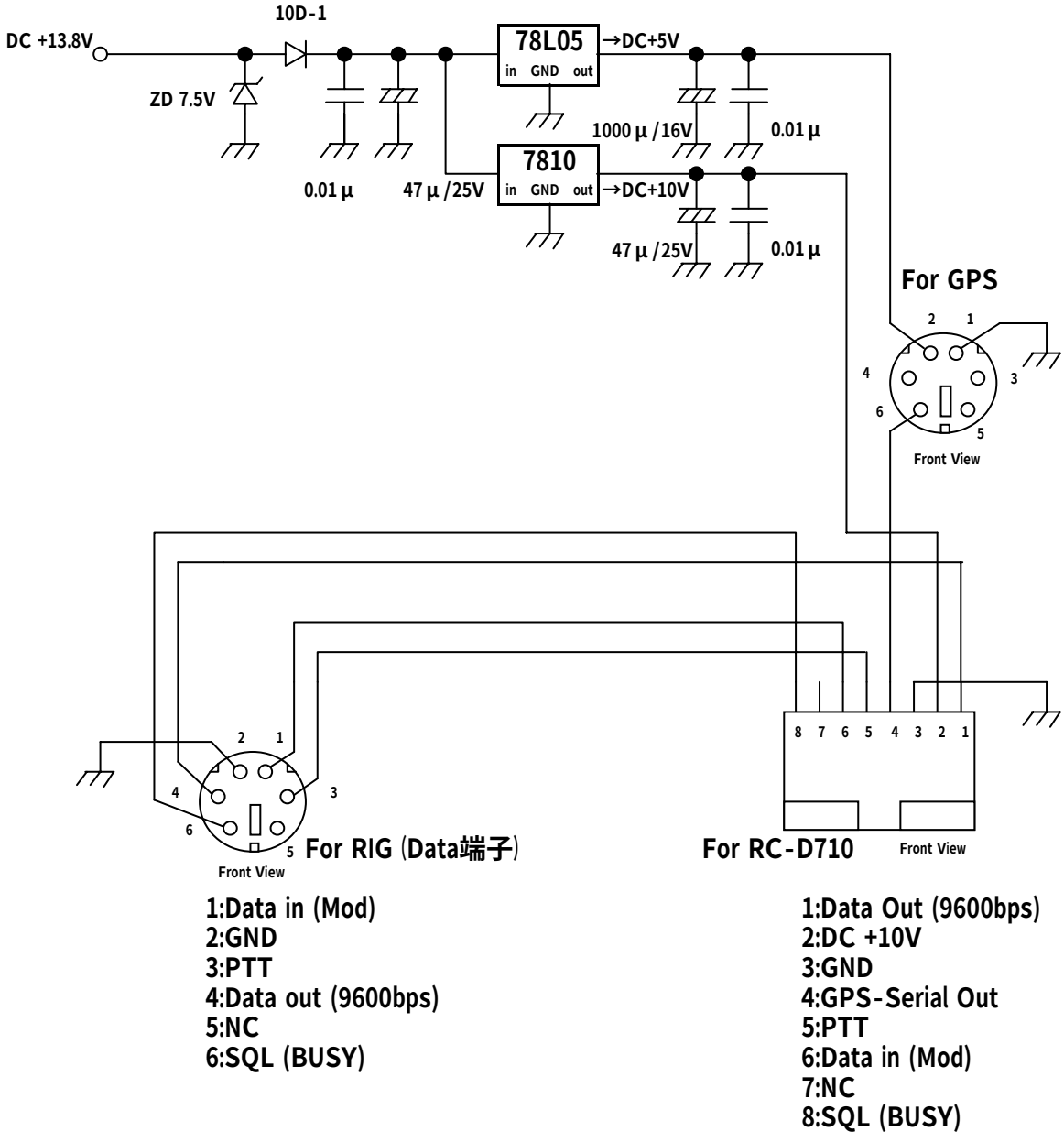

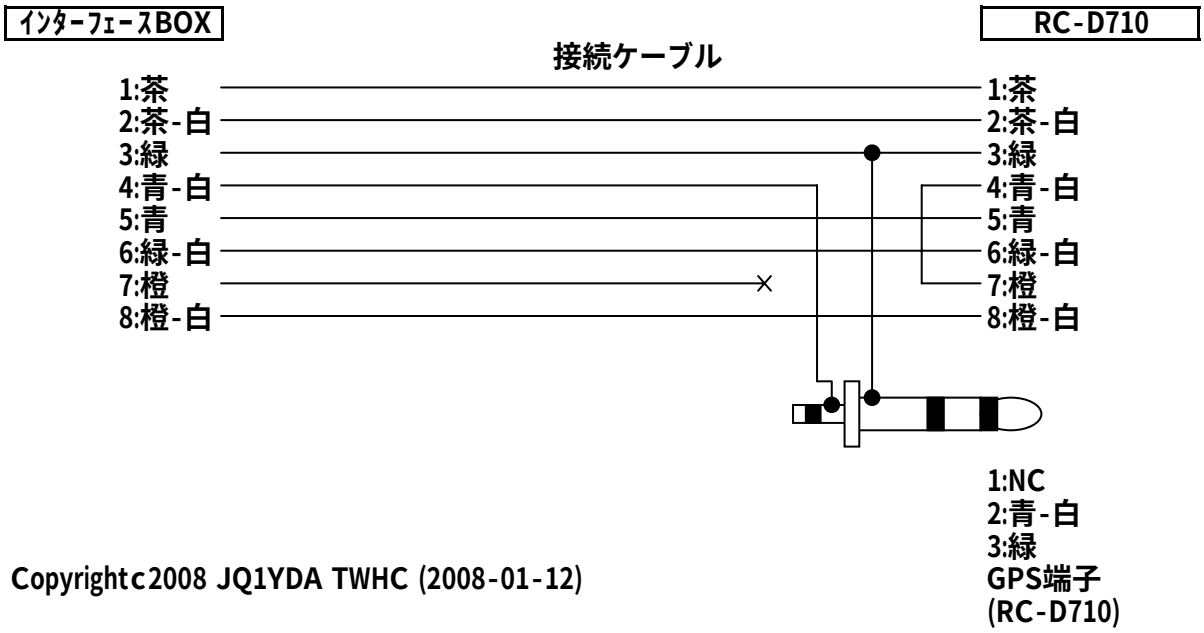

Copyright c2008 JQ1YDA TWHC (2008-01-12)